| 卷册检索号<br>SEARCH NO. OF THE VOLUME |
|---|
| MLHVDC-LCS-ECI-DD-EC-0403<br>30-B003701S-D0403 |

第 1 页 共 1 页
PAGE 1 OF 1

# 图纸文件目录（首页）

## CATALOG OF DRAWING DOCUMENTS (HEAD PAGE)

拉合尔±660kV换流站 工程 施工图 阶段
±660kV Lahore Converter Station PROJECT Detail Design DESIGN STAGE

电气 专业 第 04 卷 第 03 册
Electrical SPECIALITY VOLUME04 BOOK 03

卷册名称 全站主接地网图
Volume name The Main Grounding Grid Drawing Of Station

| | | |
|---|---|---|
| 批 准<br>APPROVED BY | 2018.2.1 | |
| 审 核<br>REVIEWED BY | 2018.2.1 | |
| 设计/勘测<br>DESIGNED BY/ SURVEYED BY | 2018.2.1 | |
| 图纸 7 张<br>DRAWING 7 NOS. | 打印件 本<br>PRINTED COPIES NOS. | |

| 序号<br>No. | 图 号<br>DRAWING NO. | 文件名称<br>DOCUMENT TITLE | 版本<br>EDITION | 张<br>NOS. | 本<br>NOS. | 备注<br>REMARKS |
|---|---|---|---|---|---|---|
| 1 | 30-B003701S-D0403-001 | 电气设计施工说明<br>Electrical design construction instructions | A | 1 | | |
| 2 | 30-B003701S-D0403-002 | 全站户外主接地网布置图<br>Layout drawing of ground grid | A | 1 | | |
| 3 | 30-B003701S-D0403-003 | 户外接地体加工及敷设详图<br>Detail drawing of outdoor ground conductor installation | A | 1 | | |
| 4 | 30-B003701S-D0403-004 | 户外水平接地体穿越电缆沟及电缆沟内通长扁钢接地示意图<br>Sketch drawing of the horizontal ground conductor crossing the cable trench | A | 1 | | |
| 5 | 30-B003701S-D0403-005 | 站区围栏接地图<br>Drawing of station fence grounding | A | 1 | | |
| 6 | 30-B003701S-D0403-006 | 轨道接地加工示意图<br>Detail drawing of track grounding installation | A | 1 | | |
| 7 | 30-B003701S-D0403-007 | 材料汇总表<br>Tables of material | A | 1 | | |

注：

# 电气设计施工说明

## Electrical design construction instructions

一、项目概况：

项目名称：巴基斯坦默蒂亚里－拉合尔±660kV直流输电工程/拉合尔±660kV换流站

建设单位：国家电网/中国电力技术装备有限公司

本次出图范围为全站主接地网

二、施工说明

1. 所有水平接地体应按图中所示尺寸敷设，主接地网埋深为换流站室外场地设计标高以下0.8m；过道路和电缆沟的接地体应敷设在垫层（包括塘渣）以下的老土/回填土中。
2. 接地网外侧水平接地体沿换流站围栏中心线外1m处敷设，部分位置根据接地网的具体情况进行适当调整。接地网边角处需做成圆弧状，圆弧半径取6米。
   在土建施工过程中，当主接地网与土建基础相碰时，铜绞线应在基础周围采用环绕的方式。但与轨道基础部分相遇的主接地网采用穿越基础的方式敷设。
3. 建筑物四周需做接地环网，布置于散水坡外距建筑物~1.0m。接地环网应与主接地网可靠电气连接，连接材料开列在本卷册，由主地网施工单位负责。
4. 全站水平接地网施工完成后，应测量接地电阻，如实测值大于0.423欧姆，应通知设计验算以决定是否需采取其它措施。
5. 为减少屏蔽作用，垂直接地体的间距不应小于其长度的2倍。
6. 电缆沟通长扁钢的接地：每隔不超过30米接地一次，且应保证每条电缆沟至少有2点接地，施工示意图见本卷册相关图纸。
7. 轨道接地：所有固定轨道用的预埋钢板每隔30~40m应采用-50×5镀锌扁钢引下接至主接地网，每段轨道应至少2点接到主地网。
   对长度在40米以下的轨道内侧预埋角钢，每段角钢的两端均需与预埋钢板焊接；对长度在40米以上的预埋角钢，则每隔30~40米与预埋钢板焊接一次。
8. 悬挂避雷线的架构的接地引下线应与主接地网连接，连接点至变压器中性点及35kV以下设备的接地点沿接地体的长度不小于15米。
9. 镀锌扁钢间的焊接采用电焊，焊接后应涂两道环氧富锌漆以防锈蚀；其它接地体间（铜绞线间、铜绞线与镀锌扁钢间）的焊接采用放热焊。
   铜绞线及放热焊点的质量应满足施工招标文件及规程规范的要求。
10. 接地体间搭接焊，其搭接长度不应小于扁钢宽度的2倍或圆钢直径的6倍。若铜绞线和镀锌扁钢的连接点在土壤中，需在连接点2m范围内，在铜绞线和镀锌扁钢上包裹沥青，以免发生腐蚀。
11. 由于地电位升大于2kV，为保证换流站内设备安全，建议在站内采取防止高电位引出措施："对所有进入换流站的低压动力、控制和通讯电缆加装隔离设备"；
    "对通向换流站外的金属管道在站内、外交界处（站内5m、站外20m范围内）采用绝缘段"。
12. 电缆的接地要求详见电缆敷设卷册中的说明。
13. 本站所有户外镀锌钢管（包括过道路钢管、二次埋管）均应单侧接地，可根据各埋管处实际情况就近与周围的接地体
    （如桥架、电缆沟内通长扁钢、辅助接地体等）相连接（-50×5镀锌扁钢）。
14. 全站电缆屏蔽接地线材料及敷设要求详见二次专业相关卷册。
15. 接地装置施工中必须满足施工验收规范、招标技术文件要求，及相关规范、规定，包含但不限于：IEEE 80-2013 "IEEE Guide for Safety in AC Substation Grounding".

First: Project overview

Project name：±660kV HVDC Project from Matiari to Lahore in Pakistan/±660kV Lahore Converter Station

Development organization：State Grid / China Electric Power Equipment And Technology CO .TD

Design scope: the Main Grounding Grid Of Station

Second: Construction Instructions

1. All horizontal grounding bodies are laid out according to the size shown in the figure. The buried depth is the 0.8m below the site design height. The grounding bodies crossing the road and cable trench should be laid on the old-fashioned / backfil below the cushion (including Tang slag).
2. The outer horizontal grounding body of the grounding grid is laid along the 1m of the fence center line of the converter station, and some position is properly adjusted according to the specific conditions of the grounding grid. A circular arc should be made at the edge angle of the grounding grid, and the radius of the arc is 6 meters.In the construction process, when the main grounding grid and civil foundation collides, copper wire should be used in the way of laying around the foundation around. But the main grounding grid that meets the track foundation is laid in the way through the foundation.
3. The grounding ring is need to do around the building,which is arranged on the apron slope away from the building ~1.0m. The grounding ring network should be connected with the main grounding grid reliably and electrically, the connecting material is listed in this volume, which is responsibled by the construction unit of the main ground.
4. After the completion of the horizontal grounding network, the grounding resistance should be measured. If the measured value is greater than 0.423 ohms, should inform the design unit to check and decide whether or not to take other measures.
5. In order to reduce the shielding effect, the spacing of the vertical grounding body should not be less than 2 times the length of the vertical grounding body.
6. The grounding of the long flat steel of the cable trench: each no more than 30 meters, and should ensure that each cable trench is at least 2 points grounding, the construction diagram is seen in the relevant drawings of the volume.
7. Track grounding: all embedded steel plates for fixed track shall be used -50x5 galvanized flat steel connected to the main grounding grid every 30~40m. Each track should connect at least 2 points to the main grounding grid. The angle steel is embedded within the track less than 40 meters. The ends of each angle steel must be welded with the embedded steel plate. For the embedded angle steel with a length of more than 40 meters, it is welded with the embedded steel plate every 30~40 meters.
8. The grounding lead line of the frame with lighting areester wire should be connected to the main grounding grid. The location of the connection point to the transformer neutral point and the equipment below 35kV is not less than 15 meters along the grounding grid.
9. The welding between galvanized flat steel shall be electrically welded. After welding, two epoxy zinc rich paints shall be applied to prevent rust. The welding of other earthing bodies (copper strand, copper strand and galvanized flat steel) shall be exothermic welding.The quality of copper strands and exothermic welding shall meet the requirements for construction bidding documents and regulations.
10. The lap welding between the grounding bodies should not be less than 2 times the width of the flat steel or 6 times diameter of the round steel. If the junction of copper strand and galvanized flat steel is in the soil, it is necessary to bitumen on the copper strand and galvanized flat steel in the range of 2m,so as to avoid corrosion.
11. Because the earth potential rises more than 2kV, in order to ensure the safety of the equipment in the converter station, it is suggested to take measures to prevent the high potential: "to install isolating equipment for all the low-voltage power, control and communication cables entering the converter station";"the metal pipe to the outside of the station should be isolated from the insulation section (in the range of 5m within the station and 20m outside the station )".
12. The requirements for the grounding of the cables are detailed in the instructions in the volume of the cable laying.
13. All outdoor galvanized steel pipes (including steel pipes crossing the road and secondary electrical buried pipes) should be grounded on one side, and can be connected to the near grounding bodies (Such as bridge, cable trench long flat steel, auxiliary grounding body etc ) with -50x5 galvanized flat steel according to the actual conditions of buried pipe.
14. The material and laying requirements of the cable shield grounding wire are detailed in the secondary electrical related volumes.
15. In the construction, the construction acceptance criteria, requirements for bidding technical documents,and related specifications, regulations, including but not limited to the IEEE 80-2013 "IEEE Guide for Safety in AC Substation Grounding" must be met.

Reference Drawings

| Drwg. No. | Title |
|---|---|
| | |

Revisions

| | Name | Date | Notes |
|---|---|---|---|
| | | | |

巴基斯坦默蒂亚里－拉合尔±660kV直流输电工程

±660kV HVDC Project from Matiari to Lahore in Pakistan

NATIONAL TRANSMISSION & DESPATCH COMPANY (NTDC) LIMITED PAKISTAN

CONTRACTOR 国家电网 STATE GRID 中国电力技术装备有限公司 CHINA ELECTRIC POWER EQUIPMENT AND TECHNOLOGY CO.,LTD.

SUBCONTRACTOR East China Electric Power Design Institute Co.,Ltd.

拉合尔±660kV换流站

±660kV Lahore Converter Station

设计阶段 PHASE: 施工图 Detail Design

MLHVDC-LCS-ECI-DD-EC-0403-001A

| | 姓名 Name | 日期 Date |
|---|---|---|
| 设计 Designed | 陈秋雨 | 2018.2.1 |
| 校核 Checked | 郑煜 | 2018.2.1 |
| 审核 Reviewed | 李红辉 | 2018.2.1 |
| 批准 Approved | 潘海平 | 2018.2.1 |

电气设计施工说明

Electrical design construction instructions

比例 Scale: 1:100 图号 DWG NO.: 30-B003701S-D0403-001 版本 REV.: A

594X841

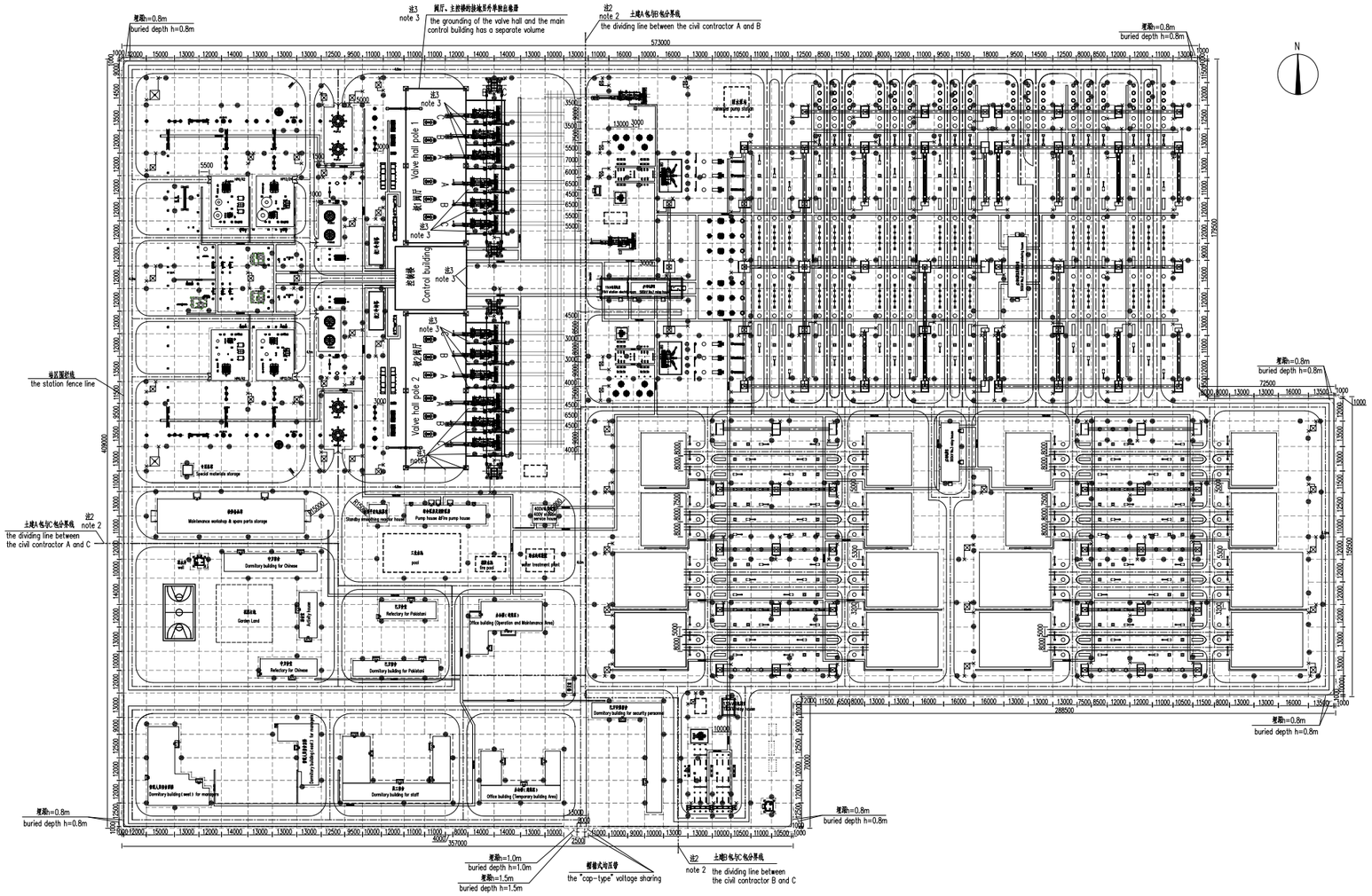
埋深h=0.8m
buried depth h=0.8m
注3 note 3
阀厅、主控楼的接地网外单独总卷尺
the grounding of the valve hall and the main control building has a separate volume
注2 note 2
土建A包/B包分界线
the dividing line between the civil contractor A and B
573000
357000
288500
72500
N
阀厅 Valve hall pole 1
控制楼 Control building
阀厅 Valve hall pole 2
Special materials storage
Maintenance workshop & spare parts storage
Standby emergency water house
Pump house &fire pump house
400V station power supply room
pool
water treatment plant
fire pool
Dormitory building for Chinese
Garden Land
Activity house
Refectory for Pakistani
Office building (Operation and Maintenance Area)
Refectory for Chinese
Dormitory building for Pakistani
Dormitory building for security personnel
Dormitory building(1 meet 1 for employee)
Dormitory building for staff
Office building (Temporary building Area)
Dormitory building(1 meet 1 for employee)
Transformer for station service
Transformer for station service
Transformer for station service

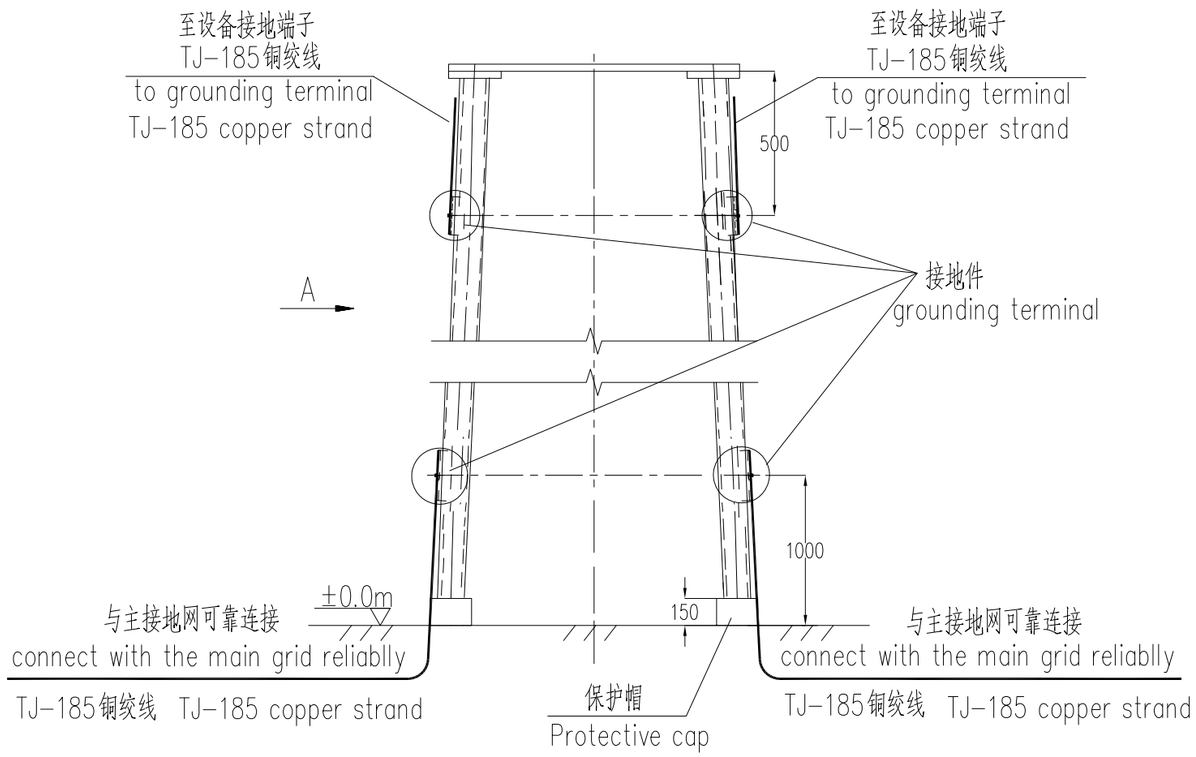


格构式支架接地示意图

The sketchof Lattice frame grounding

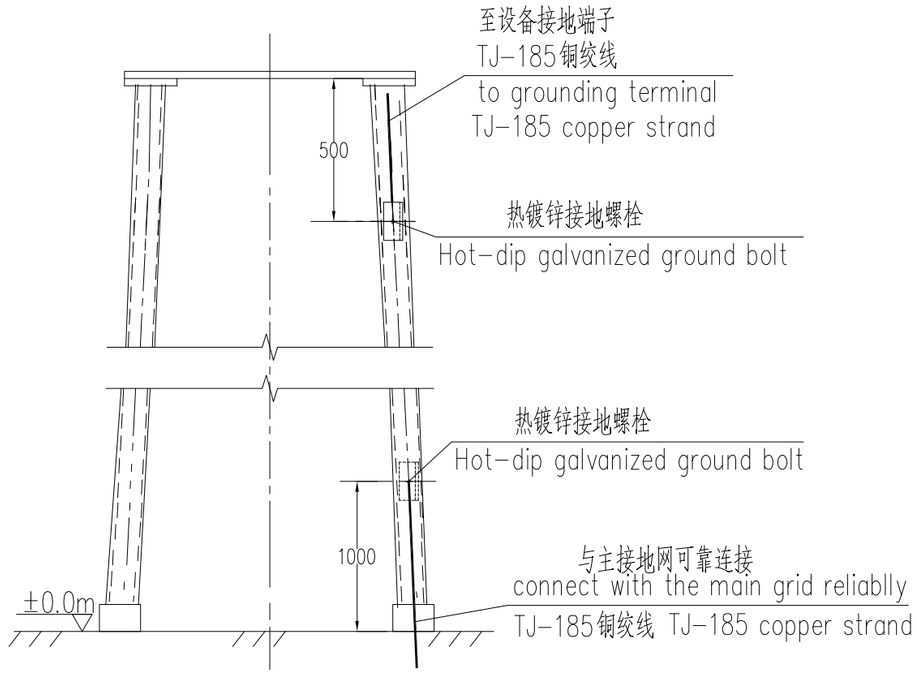


A向视图

View A

Reference Drawings

| Drwg. No. | Title |
|---|---|
| | |

Revisions

| | Name | Date | Notes |
|---|---|---|---|
| | | | |

巴基斯坦默蒂亚里-拉合尔±660kV直流输电工程

±660kV HVDC Project from Matiari to Lahore in Pakistan

NATIONAL TRANSMISSION & DESPATCH COMPANY (NTDC) LIMITED PAKISTAN

CONTRACTOR 国家电网 STATE GRID 中国电力技术装备有限公司 CHINA ELECTRIC POWER EQUIPMENT AND TECHNOLOGY CO.,LTD.

SUBCONTRACTOR East China Electric Power Design Institute Co.,Ltd.

拉合尔±660kV换流站

±660kV Lahore Converter Station

设计阶段 PHASE: 施工图 Detail Design

M L H V D C - L C S - E C I - D D - E C - 0 4 0 3 - 0 0 3 A

| | 姓名 Name | 日期 Date |
|---|---|---|
| 设计 Designed | 陈秋雨 | 2018.2.1 |
| 校核 Checked | 郑煜 | 2018.2.1 |
| 审核 Reviewed | | |
| 批准 Approved | 李建辉 | 2018.2.1 |
| 比例 Scale | | 图号 DWG NO. |

户外接地体加工及敷设详图

Detail drawing of outdoor ground conductor installation

30-B003701S-D0403-003

版本 REV A

297X420

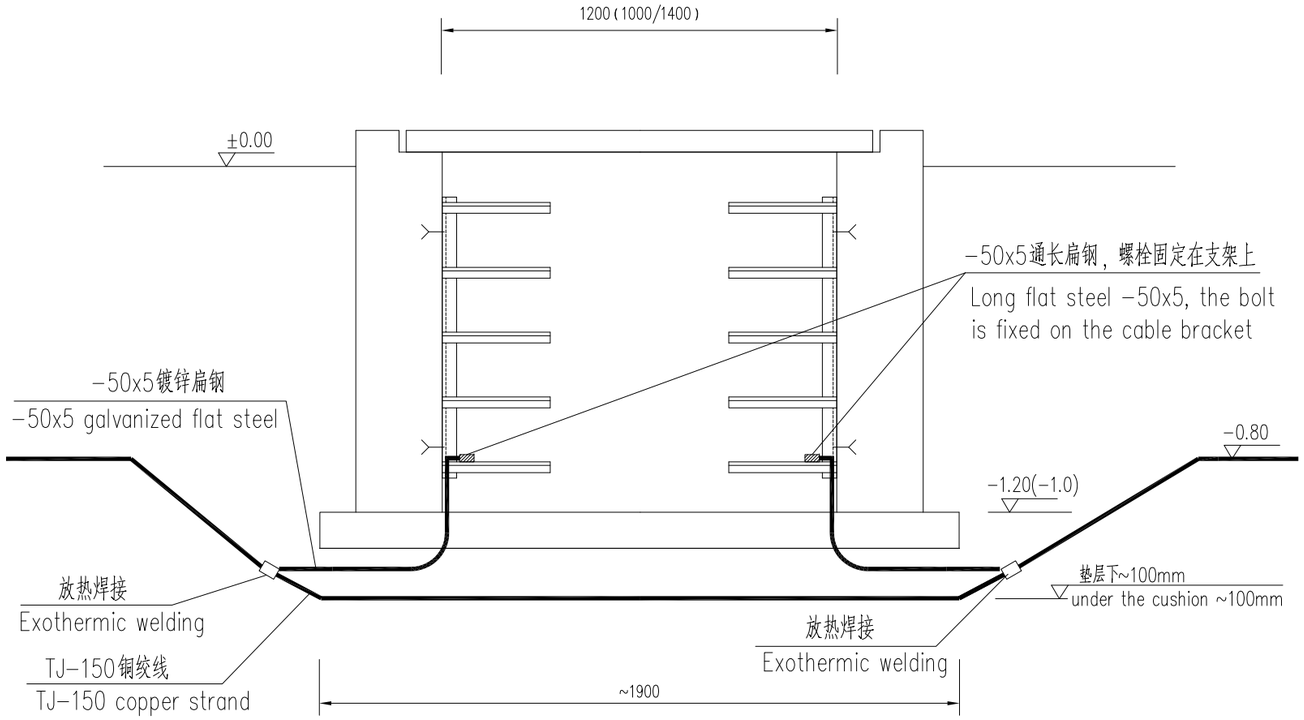


户外水平接地体穿越1000x1000、1200x1200、1400x1200电缆沟及电缆内通长扁钢接地示意图

Sketch drawing of the horizontal ground conductor crossing the cable trench of 1000x1000、1200x1200、1400x1200 and the long flat steel grounding

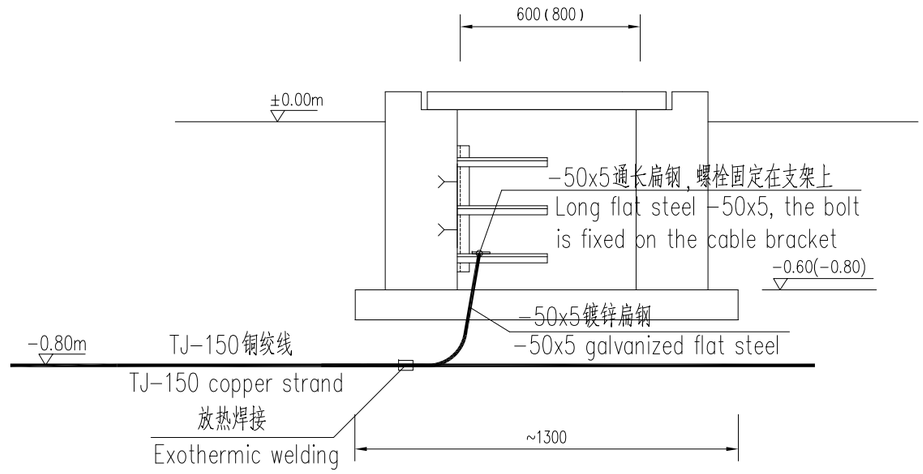


户外水平接地体穿越600x600、800x800电缆沟及电缆内通长扁钢接地示意图

Sketch drawing of the horizontal ground conductor crossing the cable trench of 600x600、800x800 and the long flat steel grounding

注：主电缆沟内通长扁钢每隔不超过30m与主地网连接一次，且应保证每条电缆沟至少有两点接地。

Note: The long flat steel in the main cable trench need to connect to the main ground grid each no more than 30 meters, and shall ensure that each cable trench has at least two grounding points.

Reference Drawings

| Drwg. No. | Title |
|---|---|
| | |

Revisions

| Name | Date | Notes |
|---|---|---|
| | | |

巴基斯坦默蒂亚里-拉合尔±660kV直流输电工程

±660kV HVDC Project from Matiari to Lahore in Pakistan

NATIONAL TRANSMISSION & DESPATCH COMPANY (NTDC) LIMITED PAKISTAN

CONTRACTOR 国家电网 STATE GRID 中国电力技术装备有限公司 CHINA ELECTRIC POWER EQUIPMENT AND TECHNOLOGY CO.,LTD.

SUBCONTRACTOR East China Electric Power Design Institute Co.,Ltd.

拉合尔±660kV换流站

±660kV Lahore Converter Station

设计阶段 PHASE: 施工图 Detail Design

M L H V D C - L C S - E C I - D D - E C - 0 4 0 3 - 0 0 4 A

| | 姓名 Name | 日期 Date |
|---|---|---|
| 设计 Designed | 张欣雨 | 2018.2.1 |
| 校核 Checked | 郑煜 | 2018.2.1 |
| 审核 Reviewed | | |
| 批准 Approved | 李建辉 | 2018.2.1 |
| 比例 Scale | | 图号 DWG NO. |

户外水平接地体穿越电缆沟及电缆沟内通长扁钢接地示意图

Sketch drawing of the horizontal ground conductor crossing the cable trench

30-B003701S-D0403-004

版本 REV: A

297X420

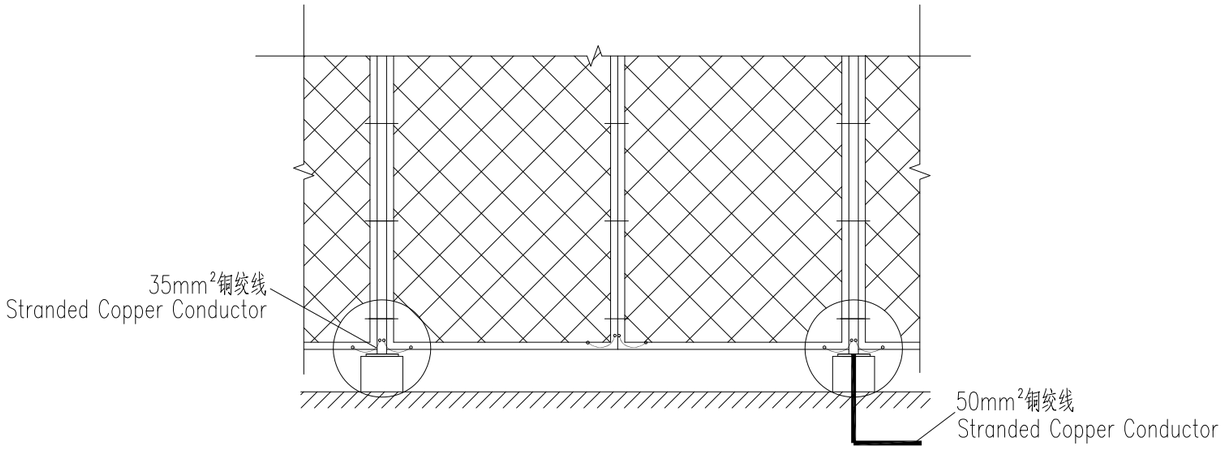


说明:

1. 围栏应多点接至水平接地网，接地点间间距不大于20m，接地采用50mm²铜绞线，围栏的拐弯处务必接地。
2. 网栏通过35mm²铜绞线与网栏立柱连接，保证围栏电气连接的连续性。

Notes:

1. The fence should be connected to the grounding grid. The distance between the grounding points should be less than 20m. The pigtails use the copper conductor of 50mm². The corner of the fence must be grounding.
2. The fence column should be connected to the fence mesh with the copper conductor of 35mm², to ensure the electrical continuity.

Reference Drawings

| Drwg. No. | Title |
|---|---|
| | |

Revisions

| | Name | Date | Notes |
|---|---|---|---|
| | | | |

巴基斯坦默蒂亚里–拉合尔±660kV直流输电工程

±660kV HVDC Project from Matiari to Lahore in Pakistan

NATIONAL TRANSMISSION & DESPATCH COMPANY (NTDC) LIMITED PAKISTAN

CONTRACTOR 国家电网 STATE GRID 中国电力技术装备有限公司 CHINA ELECTRIC POWER EQUIPMENT AND TECHNOLOGY CO.,LTD.

SUBCONTRACTOR East China Electric Power Design Institute Co.,Ltd.

拉合尔±660kV换流站

±660kV Lahore Converter Station

设计阶段 PHASE: 施工图 Detail Design

M L H V D C - L C S - E C I - D D - E C - 0 4 0 3 - 0 0 5 A

| | 姓名 Name | 日期 Date |
|---|---|---|
| 设计 Designed | 张欣雨 | 2018.2.1 |
| 校核 Checked | 郑煜 | 2018.2.1 |
| 审核 Reviewed | | |
| 批准 Approved | 李建辉 | 2018.2.1 |
| 比例 Scale | | 图号 DWG NO. |

# 站区围栏接地图

# Drawing of station fence grounding

30-B003701S-D0403-005

版本 REV: A

297X420

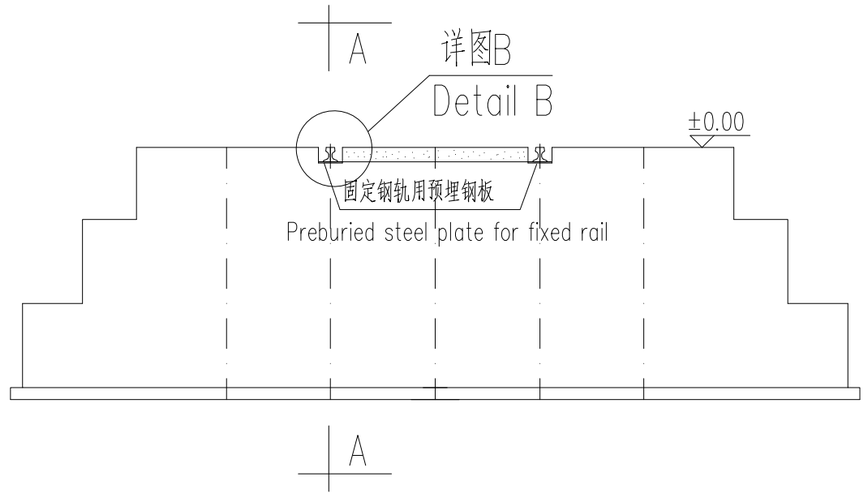


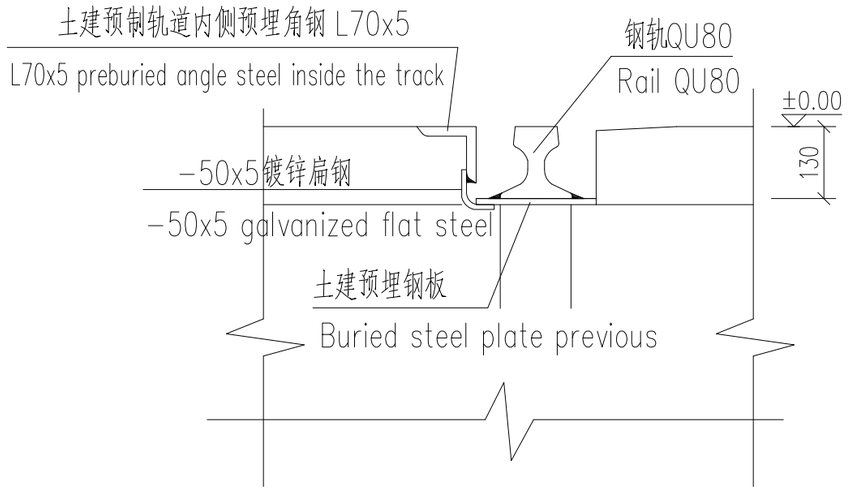


详图B 1:10

Detail B 1:10

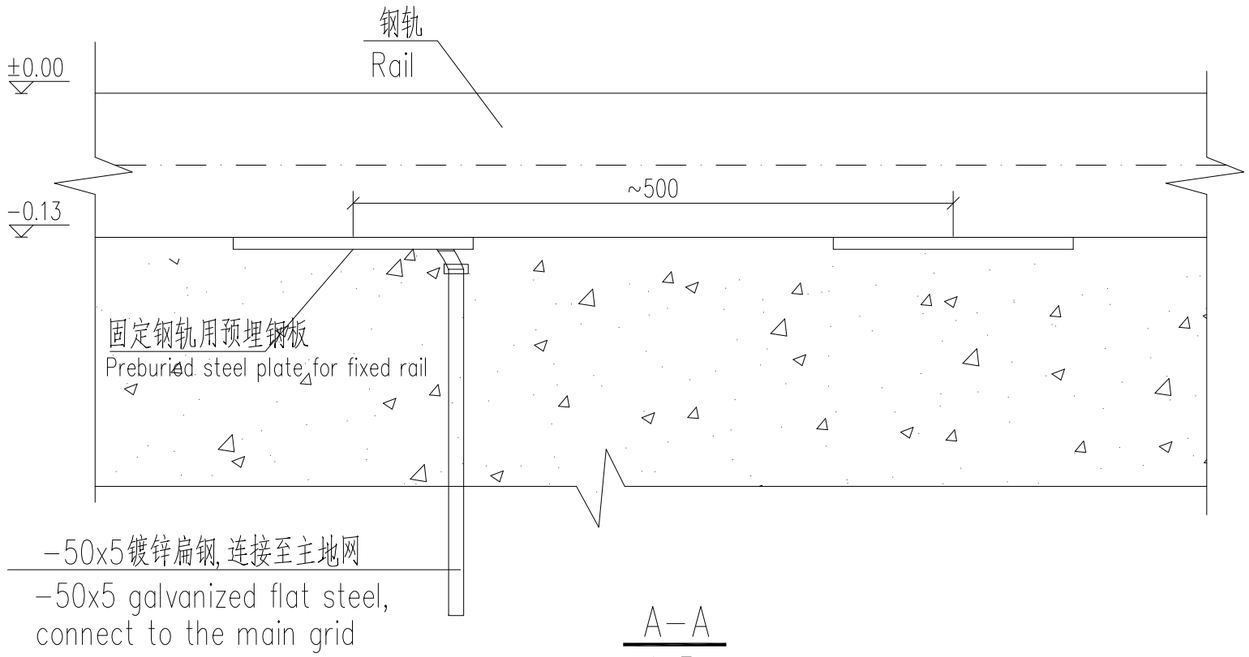


A-A

1:5

注:

1、所有固定轨道用的预埋钢板与轨道应可靠焊接以确保电气可靠连通。

2、所有与扁钢连接的焊接点均应做好防腐防锈处理。

Note:

1、The preburied steel plate fixed track should be welded reliably with the track to ensure the reliable electrical connection.

2、All welding points connected to the flat steel should be treated as anticorrosive and antirust treatment.

Reference Drawings

| Drwg. No. | Title |
|---|---|
| | |

Revisions

| | Name | Date | Notes |
|---|---|---|---|
| | | | |

巴基斯坦默蒂亚里-拉合尔±660kV直流输电工程

±660kV HVDC Project from Matiari to Lahore in Pakistan

NATIONAL TRANSMISSION & DESPATCH COMPANY (NTDC) LIMITED PAKISTAN

CONTRACTOR 国家电网 STATE GRID 中国电力技术装备有限公司 CHINA ELECTRIC POWER EQUIPMENT AND TECHNOLOGY CO.,LTD.

SUBCONTRACTOR East China Electric Power Design Institute Co.,Ltd.

拉合尔±660kV换流站

±660kV Lahore Converter Station

设计阶段 PHASE: 施工图 Detail Design

M L H V D C - L C S - E C I - D D - E C - 0 4 0 3 - 0 0 6 A

| | 姓名 Name | 日期 Date |
|---|---|---|
| 设计 Designed | 任秋雨 | 2018.2.1 |
| 校核 Checked | 郑煜 | 2018.2.1 |
| 审核 Reviewed | | |
| 批准 Approved | 李建辉 | 2018.2.1 |
| 比例 Scale | | 图号 DWG NO. |

轨道接地加工示意图

Detail drawing of track grounding installation

30-B003701S-D0403-006

版本 REV: A

297X420

土建A包材料表（直流场、换流场、站前区） Material bill of civil contractor A (DC field、Converter field、Pre station field)

| 序号 Item No | 名称 Name | 型号及规范 Specification | 单位 Unit | 数量 Quanity | 备注 Comments |
|---|---|---|---|---|---|
| 1 | 水平接地体 horizontal grounding conductor | TJ-150铜绞线 TJ-150 copper strand | 米 m | 9700 | 甲供 Contractor supply |
| 2 | 环房水平接地体 horizontal grounding conductor | TJ-150铜绞线 TJ-150 copper strand | 米 m | 605 | 乙供 Construction supply |
| 3 | 垂直接地体 vertical grounding rods | Φ17.2铜覆钢棒，长度3m Copper-Clad Steel，Φ17.2mm, Length: 3.0m | 根 Pcs | 210 | 甲供 Contractor supply |
| 4 | 放热焊点 exothermic weld connection | 水平接地体十字焊接 exothermic weld connection for '十' type | 个 Pcs | 300 | 水平接地体焊点 for the horizontal grounding grid |
| 5 | 放热焊点 exothermic weld connection | 水平接地体T字焊接 exothermic weld connection for 'T' type | 个 Pcs | 300 | 水平接地体焊点 for the horizontal grounding grid |
| 6 | 放热焊点 exothermic weld connection | | 个 Pcs | 210 | 垂直接地体焊点 for the vertical grounding rods |
| 7 | 金属埋管接地 Metal pipe grounding | 镀锌扁钢 -50x5 galvanized flat steel (-50X5) | 米 m | 750 | 含金属水工管、过道路埋管、电缆沟埋管接地等 Contain metal pipe grounding for water pipe、crossing road buried pipe、cable trench buried pipe and so on. |
| | | 放热焊点 exothermic weld connection | 个 Pcs | 150 | |
| 8 | 电缆沟接地 cable trench grounding | 镀锌扁钢 -50x5 galvanized flat steel (-50X5) | 米 m | | 电缆沟内通长扁钢 for the long flat steel in the cable trench |
| | | 镀锌扁钢 -50x5 galvanized flat steel (-50X5) | 米 m | 750 | |
| | | 放热焊点 exothermic weld connection | 个 Pcs | 150 | |
| 9 | 轨道接地 track grounding | 镀锌扁钢 -50x5 galvanized flat steel (-50X5) | 米 m | 500 | 全站换流变轨道接地材料量 the total track grounding material quantity |
| | | 放热焊点 exothermic weld connection | 个 Pcs | 95 | |
| 10 | 站区围栏接地 station fence grounding | 铜绞线 TJ-50 copper strand TJ-50 | 米 m | 400 | 仅站区围栏接地，不含设备围栏接地 Only station fence grounding, without equipment fence grounding |
| | | 铜鼻子 配TJ-50 copper nose used for copper strand TJ-50 | 个 Pcs | 120 | |
| | | 放热焊点 exothermic weld connection | 个 Pcs | 120 | |
| 11 | 金属水工管、站区围栏跨接 metal water pipe、station fence jumper | 铜绞线 TJ-35 copper strand TJ-35 | 米 m | 800 | 含站区围栏跨接、金属水工管法兰跨接 contain station fence jumper and metal water pipe flange jumper |
| | | 铜鼻子 配TJ-35 copper nose used for copper strand TJ-35 | 个 Pcs | 2600 | |
| 12 | 地面金属水工立管接地 metal hydraulic pipe grounding | 铜绞线 TJ-50 copper strand TJ-50 | 米 m | 800 | |
| | | 放热焊点 exothermic weld connection | 个 Pcs | 150 | |
| | | 接地螺栓 M8x25 grounding bolt M8x25 | 个 Pcs | 150 | |
| 13 | 过道路/电缆沟埋管 cross road/cable trench buried pipe | 镀锌钢管 SC50 galvanized steel pipe SC50 | 米 m | 1000 | |

土建B包材料表（交流场及交流滤波器场） Material bill of civil contractor B (AC field and AC filter field)

| 序号 Item No | 名称 Name | 型号及规范 Specification | 单位 Unit | 数量 Quanity | 备注 Comments |
|---|---|---|---|---|---|
| 1 | 水平接地体 horizontal grounding conductor | TJ-150铜绞线 TJ-150 copper strand | 米 m | 29660 | 甲供 Contractor supply |
| 2 | 环房水平接地体 horizontal grounding conductor | TJ-150铜绞线 TJ-150 copper strand | 米 m | 340 | 乙供 Construction supply |
| 3 | 垂直接地体 vertical grounding rods | Φ17.2铜覆钢棒，长度3m Copper-Clad Steel，Φ17.2mm, Length: 3.0m | 根 Pcs | 500 | 甲供 Contractor supply |
| 4 | 放热焊点 exothermic weld connection | 水平接地体十字焊接 exothermic weld connection for '十' type | 个 Pcs | 930 | 水平接地体焊点 for the horizontal grounding grid |
| 5 | 放热焊点 exothermic weld connection | 水平接地体T字焊接 exothermic weld connection for 'T' type | 个 Pcs | 760 | 水平接地体焊点 for the horizontal grounding grid |
| 6 | 放热焊点 exothermic weld connection | | 个 Pcs | 500 | 垂直接地体焊点 for the vertical grounding rods |
| 7 | 金属埋管接地 Metal pipe grounding | 镀锌扁钢 -50x5 galvanized flat steel (-50X5) | 米 m | 1900 | 含金属水工管、过道路埋管、电缆沟埋管接地等 Contain metal pipe grounding for water pipe、crossing road buried pipe、cable trench buried pipe and so on. |
| | | 放热焊点 exothermic weld connection | 个 Pcs | 380 | |
| 8 | 电缆沟接地 cable trench grounding | 镀锌扁钢 -50x5 galvanized flat steel (-50X5) | 米 m | | 电缆沟内通长扁钢 for the long flat steel in the cable trench |
| | | 镀锌扁钢 -50x5 galvanized flat steel (-50X5) | 米 m | 1800 | |
| | | 放热焊点 exothermic weld connection | 个 Pcs | 360 | |
| 9 | 过路/电缆沟埋管 cross road/cable trench buried pipe | 镀锌钢管 SC50 galvanized steel pipe SC50 | 米 m | 3500 | |

电气A包材料表（直流场、换流场、站前区） Material bill of electrical contractor A (DC field、current conversion field and the front field)

| 序号 Item No | 名称 Name | 型号及规范 Specification | 单位 Unit | 数量 Quanity | 备注 Comments |
|---|---|---|---|---|---|
| 1 | 阀冷设备接地 Valve cooling equipment grounding | TJ-185铜绞线 TJ-185 copper strand | 米 m | 300 | |
| | | 铜鼻子 配TJ-185 copper nose used for copper strand TJ-185 | 个 Pcs | 40 | |
| | | 放热焊点 exothermic weld connection | 个 Pcs | 40 | |
| 2 | 电缆沟内通长扁钢 the long flat steel in the cable trench | 镀锌扁钢 -50x5 galvanized flat steel (-50X5) | 米 m | 15000 | 全站户外电缆沟内通长扁钢材料量 the quantity for the whole substation |
| 3 | 构架/避雷线塔接地 frame/lighting arrester tower grounding | TJ-185铜绞线 TJ-185 copper strand | 米 m | 500 | |
| | | 铜鼻子 配TJ-185 copper nose used for copper strand TJ-185 | 个 Pcs | 80 | |
| | | 放热焊点 exothermic weld connection | 个 Pcs | 80 | |
| | | 接地螺栓 M16x45 grounding bolt M16x45 | 个 Pcs | 80 | |
| 4 | 二次屏柜PE线接地 electrical cabinet PE wire grounding | TJ-50铜绞线 TJ-50 copper strand | 米 m | 1000 | |
| | | 铜鼻子 配TJ-50 copper nose used for copper strand TJ-50 | 个 Pcs | 800 | |
| 5 | 隔声屏障接地 Sound barrier grounding | TJ-50铜绞线 TJ-50 copper strand | 米 m | 50 | |
| | | 铜鼻子 配TJ-50 copper nose used for copper strand TJ-50 | 个 Pcs | 10 | |
| | | 放热焊点 exothermic weld connection | 个 Pcs | 10 | |

电气B包材料表（交流场、交流滤波器场及生活区） Material bill of electrical contractor B (AC field、AC filter field and living area)

| 序号 Item No | 名称 Name | 型号及规范 Specification | 单位 Unit | 数量 Quanity | 备注 Comments |
|---|---|---|---|---|---|
| 1 | 构架/避雷线塔接地 frame/lighting arrester tower grounding | TJ-185铜绞线 TJ-185 copper strand | 米 m | 2000 | |
| | | 铜鼻子 配TJ-185 copper nose used for copper strand TJ-185 | 个 Pcs | 300 | |
| | | 放热焊点 exothermic weld connection | 个 Pcs | 300 | |
| | | 接地螺栓 M16x45 grounding bolt M16x45 | 个 Pcs | 300 | |

Reference Drawings

| Drwg. No. | Title |
|---|---|
| | |

Revisions

| | Name | Date | Notes |
|---|---|---|---|
| | | | |

巴基斯坦默蒂亚里-拉合尔±660kV直流输电工程

±660kV HVDC Project from Matiari to Lahore in Pakistan

NATIONAL TRANSMISSION & DESPATCH COMPANY (NTDC) LIMITED PAKISTAN

CONTRACTOR 国家电网 STATE GRID 中国电力技术装备有限公司 CHINA ELECTRIC POWER EQUIPMENT AND TECHNOLOGY CO.,LTD.

SUBCONTRACTOR East China Electric Power Design Institute Co.,Ltd.

拉合尔±660kV换流站

±660kV Lahore Converter Station

设计阶段 PHASE: 施工图 Detail Design

M L H V D C - L C S - E C I - D D - E C - 0 4 0 3 - 0 0 7 A

| | 姓名 Name | 日期 Date |
|---|---|---|
| 设计 Designed | 张秋雨 | 2018.2.1 |
| 校核 Checked | 郑煜 | 2018.2.1 |
| 审核 Reviewed | | |
| 批准 Approved | 李桂辉 | 2018.2.1 |

材料汇总表

Tables of material

比例 Scale | 图号 DWG NO. 30-B003701S-D0403-007 | 版本 REV A

420X594